THIS PRINT IS THE PROPERTY OF E-DRIVE DESIGN, INC. AND REPRESENTS A PROPRIETARY ARTICLE TO WHICH E-DRIVE DESIGN, INC. RETAINS THE EXCLUSIVE RIGHT OF USE AND/OR MANUFACTURE AND/OR SALE. THE PRINT OR THE ARTICLE SHOWN HEREON MAY NOT BE REPRODUCED.

SERVICE PARTS LIST	
ITEM	PART NAME/NUMBER
A	Front Seal: WDE201000Z94
AE	Front Seal: JM 6583 SS

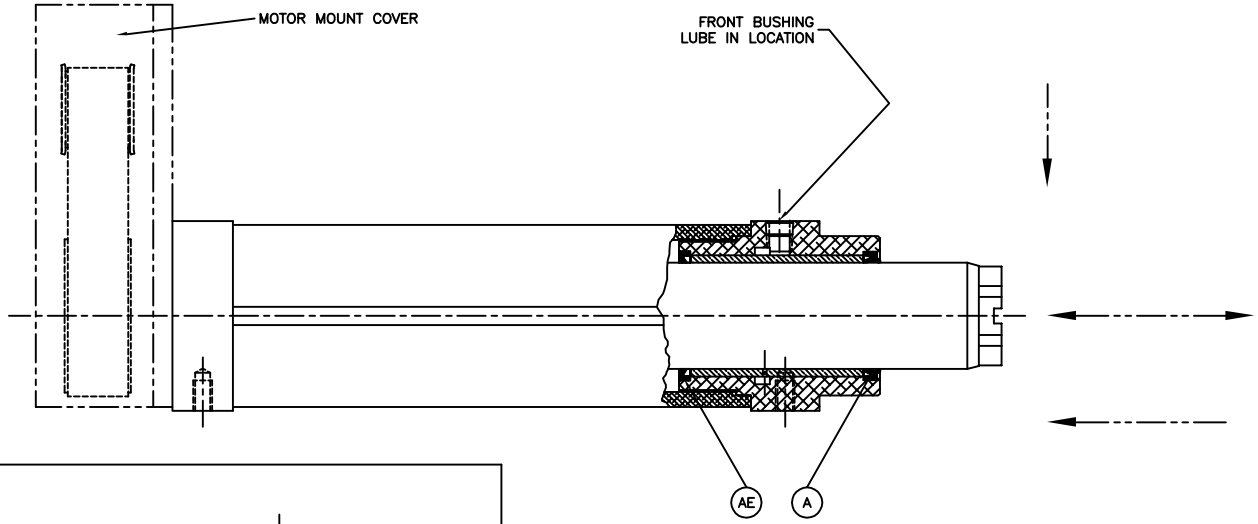

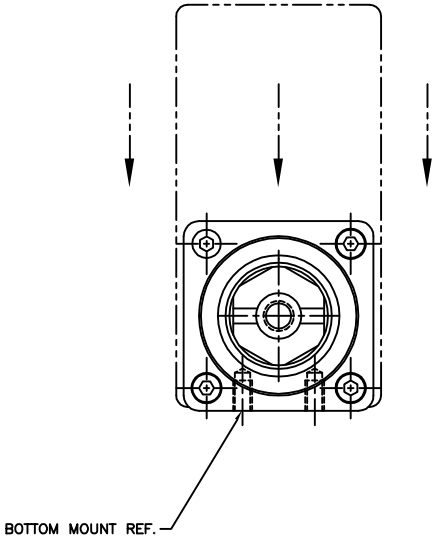

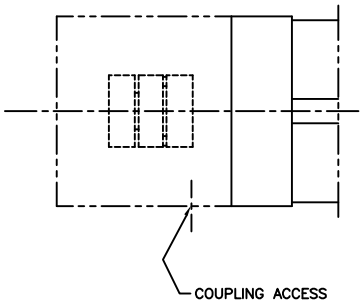

"L" MOUNT

ACCEPTABLE LOAD VECTORS

REV.	BY	DATE	CHANGE

TOLERANCES UNLESS OTHERWISE NOTED
FRACTIONAL ± = 1/64
.XXX ± = .005
ANGLES ± = 0° 30'

ALL MACHINED SURFACES 125

BREAK SHARP EDGES .005–.015 x 45° UNLESS OTHERWISE SPECIFIED

E-DRIVE Design, Inc.
E•DRIVE Design, Inc. • 120 Vanderbilt Avenue • West Hartford, Connecticut

SCALE FULL | MATL: | DRAWN BY TCP
DATE 01-01
DRAWING NAME LUBE AND LOAD GUIDE
FOR SL2 SERIES | DRAWING NUMBER